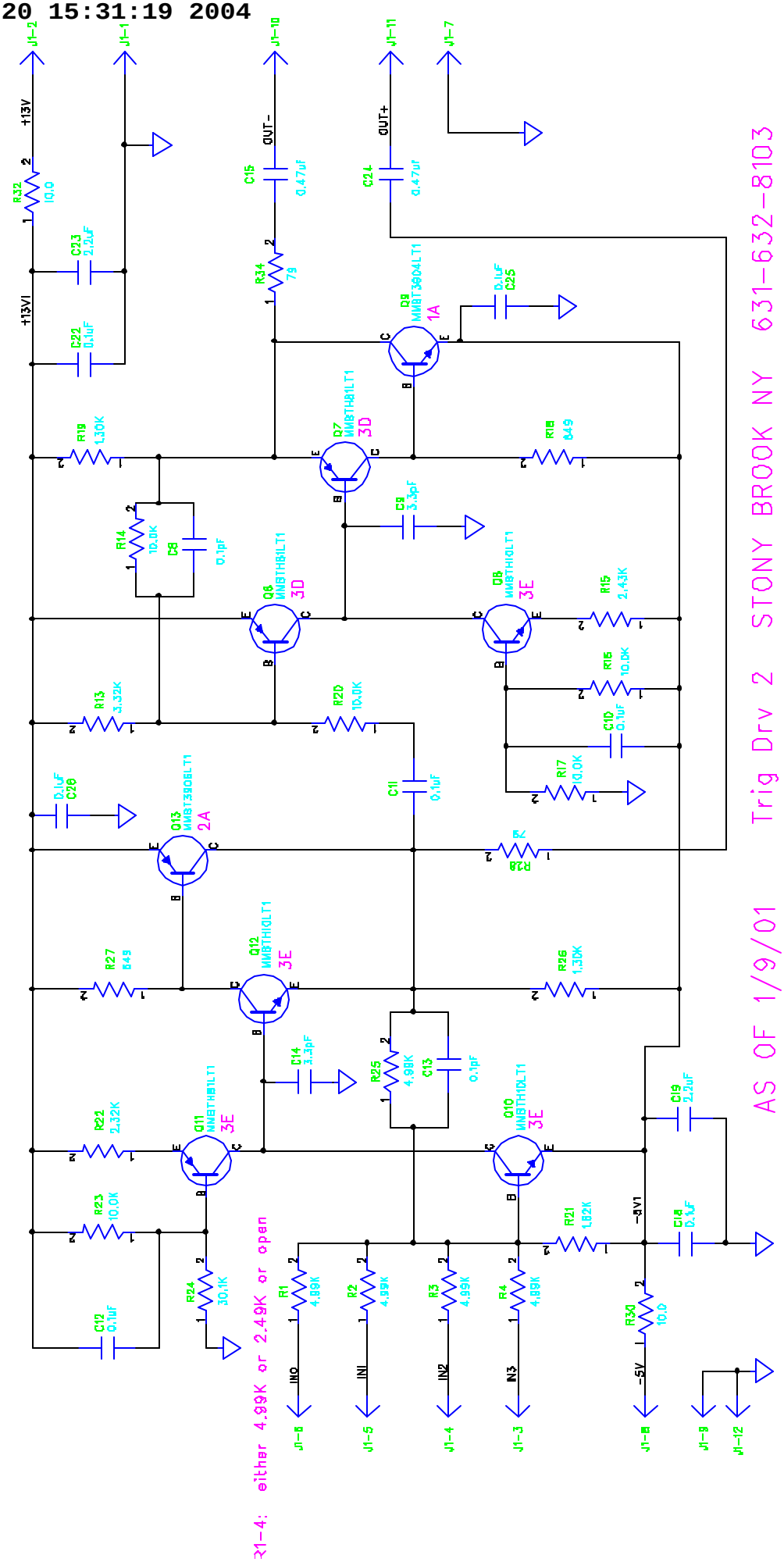
J1-2
J1-1
J1-10
J1-11
J1-7
+13V
+13V1
R32 10.0
C23 2.2uF
C22 0.1uF
OUT-
OUT+
C15 0.47uF
C24 0.47uF
R34 79
Q9 MMBT3904LT1 1A
C25 0.1uF
Q7 MMBTH81LT1 3D
R19 1.30K
R18 849
C9 3.3pF
R14 10.0K
C8 0.1pF
Q6 MMBTH81LT1 3D
Q8 MMBTH10LT1 3E
R15 2.43K
R16 10.0K
C10 0.1uF
R17 10.0K
R13 3.32K
R20 10.0K
C11 0.1uF
C26 0.1uF
Q13 MMBT3906LT1 2A
R28 79
Q12 MMBTH10LT1 3E
R27 849
R26 1.30K
C14 3.3pF
R25 4.99K
C13 0.1pF
Q11 MMBTH81LT1 3E
Q10 MMBTH10LT1 3E
C19 2.2uF
R22 2.32K
R23 10.0K
R21 1.82K
-9V1
C18 0.1uF
R24 30.1K
C12 0.1uF
R1 4.99K
R2 4.99K
R3 4.99K
R4 4.99K
R30 10.0
IN0
IN1
IN2
IN3
-5V
J1-8
J1-5
J1-4
J1-3
J1-6
J1-9
J1-12
R1-4: either 4.99K or 2.49K or open
AS OF 1/9/01
Trig Drv 2 STONY BROOK NY 631-632-8103